Current part is item (35) on diagram. Available at www.oshkoshequipment.com

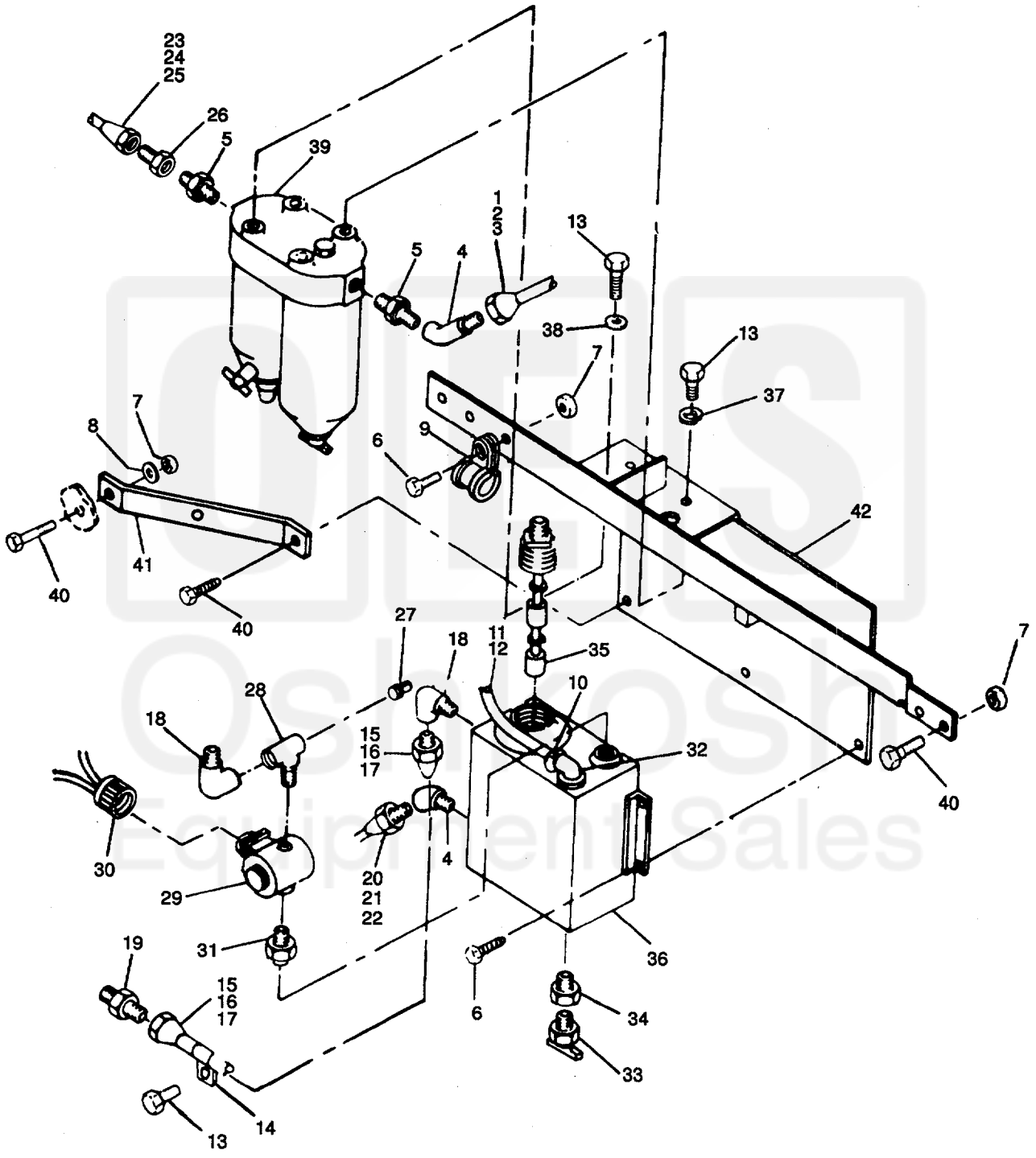

Figure 70. Day Tank and Primary Fuel Filter.

Current part is item (35) on diagram. Available at www.oshkoshequipment.com

Current part is item (35) on diagram. Available at www.oshkoshequipment.com

(1) ILLUSTRATION		(2) SMR CODE				(3) USMC		(4)	(5) DESCRIPTION			(6)	(7)	(8)
(a) FIG NO.	(b) ITEM NO.	a ARMY	b AIR FORCE	c NAVY	d USMC	a SSI	b REPL FACTOR	NATIONAL STOCK NUMBER	REF NUMBER	MFR CODE	USABLE ON CODE	U/M	QTY INC IN UNIT	USMC QTY PER EQUIP
70	26	PAOZZ	PAOZZ	XBFZZ	PAFZZ	D	.008	4730-00-620-6904	ADAPTER, STRAIGHT. PIPE			EA	1	6
									MS51500A5-4	(96906)				
70	27	PAOZZ	PAOZZ	XBGZZ	PAFZZ	D	.008	4730-00-202-9390	ELBOW, PIPE			EA	1	2
									70-1195-2	(30554)				
									1/4SHP-B	(30780)				
									103866	(92192)				
70	28	PAOZZ	PAOZZ	PAGZZ	PAFZZ	D	.008	4730-00-214-8108	TEE. PIPE			EA	1	1
									2091-4-4S	(01276)				
70	29	PAOZZ	PAOZZ	PAGZZ	PAFZZ		.015	4810-00-216-1849	VALVE. SOLENOID			EA	1	1
									69-787-2	(30554)				
									VSL8720	(81978)				
70	30	PAOZZ	PAOZZ	PAOZZ	PAFZZ	D	.023	5935-00-827-9045	CONNECTOR, RECECPTACLE			EA	1	2
									MS3102R10SL4P	(96906)				
70	31	PAOZZ	PAOZZ	XBGZZ	PAFZZ	D	.008	4730-00-278-3722	NIPPLE, PIPE			EA	1	1
									114FF-S	(30790)				
70	32	PAOZZ	PAOZZ	XBGZZ	PAFZZ	D	.008	4730-00-041-2526	ELBOW, PIPE TO HOSE 114-1/4			EA	1	1
									70-1415	(30554)				
									2296-4	(93061)				
70	33	PAOZZ	PAOZZ	XBGZZ	PAOZZ	D	.008	4820-00-752-9040	COCK, DRAIN			EA	1	4
									MS35782-4	(96906)				
70	34	PAOZZ	PAOZZ	XBGZZ	PAFZZ	D	.008	4730-00-248-6728	BUSHING, PIPE			EA	1	1
									70-1314-21	(30554)				
									14X1l-PTRS	(30780)				
70	35	PAOZZ	PAOZZ	PAGZZ	PAFZZ		.015	5930-00-405-6153	SWITCH, FLOAT. FUEL			EA	1	1
									70-1594	(30554)				
									LS40820	(04034)				
70	36	XBOFF	XB	XBGZZ	XBFZZ				DAY TANK, FUEL			EA	1	1
									70-1244	(30554)				
									70-1244	(93742)				
70	37	PAOZZ	PAOZZ	XBGZZ	PAFZZ	D	.010	5310-00061-1258	WASHER, LOCK			EA	2	66
									MS45904-76	(96906)				
70	38	PAOZZ	PAOZZ	PAGZZ	PAFZZ	D	.010	5310-00-595-7237	WASHER. LOCK			EA	2	2
									MS35333-42	(96906)				
70	39	PAOOO	PAOOO	PAGGG	PAOOO	-	.500	2910-00-085-5598	FILTER, FLUID			EA	1	1
									See figure 71 for breakout					
									70-507	(30554)				
									240903	(73370)				
70	40	PAOZZ	PAOZZ	PAGZZ	PAOZZ	D	.008	5306-00-036-6982	BOLT. ASSEMBLED WASHER			EA	6	71
									70-13194	(30554)				
									61-251281-00-024BO542B	(78189)				
70	41	XBOZZ	MOO	XBFZZ	XBOZZ				BRACE, DAY TANK			EA	1	1
									70-1257	(30554)				
									70-1257	(93742)				
70	42	XBOZZ	XB	XBGZZ	XBOZZ				BRACKET, TANK			EA	1	1
									70-1245	(30554)				
									70-1245	(93742)				

Current part is item (35) on diagram. Available at www.oshkoshequipment.com